# Bilateral Earlobe Pulse Timing Measurement Device

ECE 445 Design Document - Spring 2026

Project #40

By: Joshua Joseph, Mark Schmitt, Zhikuan Zhang

T.A: Shiyuan Duan

Contents:

1. Introduction
    - Problem
    - Solution
    - Visual Aid
    - High-level requirement list

2. Design
    - Block Diagram
    - Physical Design
    - Software Design
    - Power Subsystem
    - ECG Analog Front-End System
    - Dual PPG Subsystem
    - Data Acquisition and Control Subsystem
    - Tolerance Analysis.

3. Cost and Schedule
    - Cost Analysis
    - Schedule

4. Engineering Ethics and Safety
    - Ethics
    - Safety and Regulatory Considerations
    - Societal Impact

5. References

# Problem:

Pulse arrival time (PAT) and pulse transit time (PTT) is widely studied as a non-invasive physiological metric that reflects cardiovascular dynamics, vascular stiffness, and autonomic regulation. Conventional PTT systems typically measure the time delay between an ECG R-peak and a single peripheral photoplethysmography (PPG) waveform, often at the finger or ear. While these systems provide useful global timing information, they do not enable synchronized bilateral comparisons of pulse arrival times, which are important for detecting asymmetric blood flow conditions that may indicate vascular abnormalities such as stroke.

Currently, there is a lack of low-cost hardware platforms capable of acquiring multiple physiological signals with precise time synchronization. Accurate bilateral PTT comparison requires sub-millisecond alignment between ECG and multiple PPG channels to ensure that measured timing differences reflect true physiological variations rather than measurement error. Many existing research systems rely on independent sensors or software-based synchronization, which can introduce timing uncertainty and limit the reliability of bilateral timing analysis. As a result, no readily available measurement tools allow controlled bilateral pulse timing comparison between the left and right earlobes with sufficient precision. Without synchronized acquisition hardware, it is difficult to investigate how factors such as posture, head orientation, or asymmetric vascular conditions influence bilateral pulse timing.

From a societal perspective, improved non-invasive cardiovascular sensing tools contribute to public health and preventive medicine. Cardiovascular disease and stroke remain leading causes of mortality worldwide. Systems capable of accurately measuring bilateral pulse timing differences could support future research into vascular asymmetry, autonomic regulation, and early indicators of circulatory abnormalities. Although this project does not aim to produce a clinical diagnostic device, it provides foundational measurement capabilities for investigating bilateral cardiovascular dynamics and developing next-generation wearable health monitoring technologies. Additionally, affordable synchronized physiological measurement systems can broaden access to research tools in educational and low-resource environments.

# Solution:

This project proposes a custom PCB-based multi-channel physiological sensing platform capable of simultaneously acquiring:

- One ECG channel (cardiac timing reference)
- Two synchronized PPG channels (left and right earlobes)

The ECG channel provides a reliable R-peak reference for cardiac cycle timing. Two identical PPG sensing channels measure pulse waveforms at both earlobes. By computing pulse arrival times relative to the ECG R-peak, the system enables bilateral pulse timing comparison under controlled experimental conditions such as neutral posture, stroke, head tilt, or side-lying orientation.

The design emphasizes:

- Low-noise analog front-end circuitry
- Hardware-level time synchronization
- Shared sampling clock architecture
- Precise multi-channel ADC acquisition

All channels are sampled using a shared clock source to minimize relative timing jitter. Bluetooth, if implemented, is used strictly for data transmission and not for timing synchronization.

The system is positioned as a measurement and validation tool rather than a medical diagnostic device. Its primary purpose is to provide synchronized physiological waveform acquisition with sufficient timing precision to analyze bilateral pulse transit differences.

## Visual Aid:

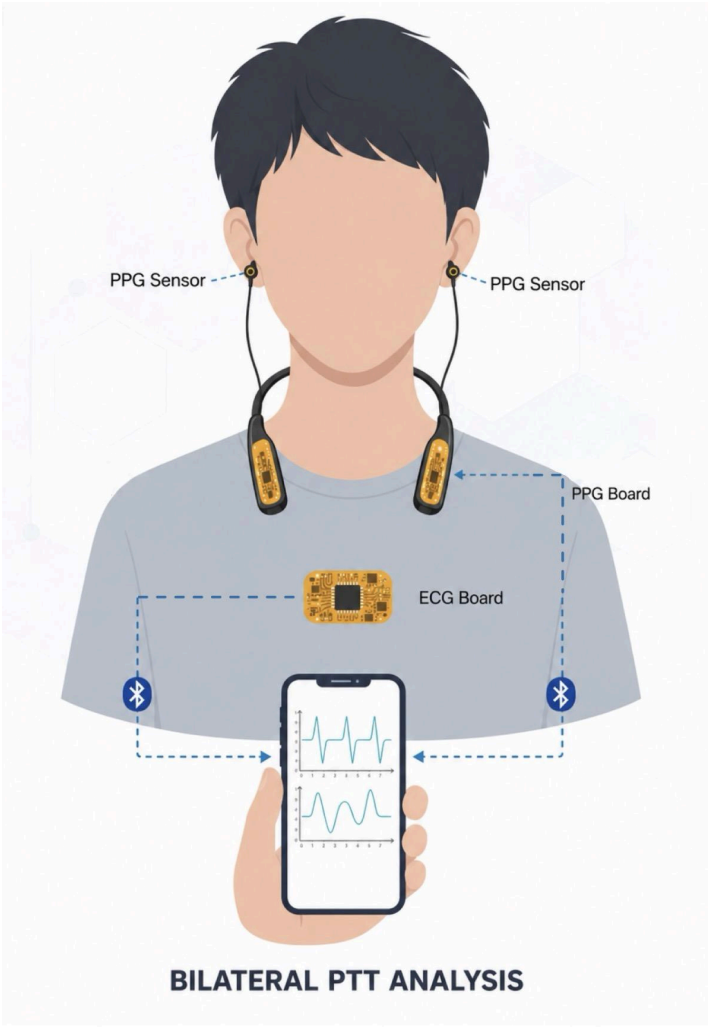


Figure 1. Context diagram of bilateral earlobe pulse timing measurement system.

As shown in the figure we will have two PPG boards connected to a sort of clip or wearable device to keep it on the earlobe. We would have the ECG sensor taped to the chest or have a strap made for it.

## High-level Requirements:

- The microcontroller (nRF52840 chip) basic functions are working normally, including Bluetooth Low Energy wireless connection, data writing and reading, SPI communication, and the basic charging system is functioning properly.
- The MAX30003 driver is functioning properly, able to collect ECG signals and display any person's electrocardiogram dynamically via Bluetooth wireless transmission (ECG board fully working).
- Both MAX86141 drivers are working properly: they can drive the LEDs to flash, collect signals generated by the photodiodes, correctly plot the PPG waveform, and calculate the PTT time difference between both sides.

## Block Diagram:

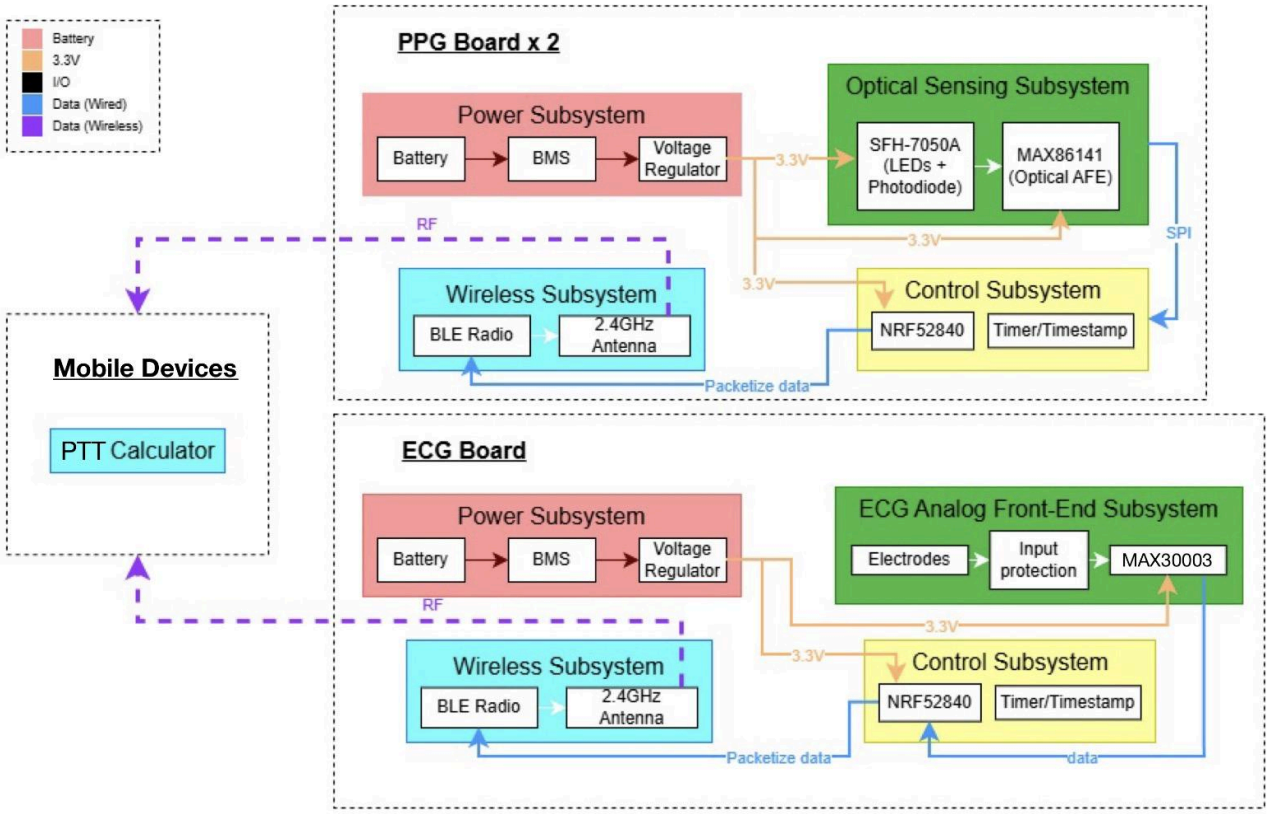


Figure 2. Block diagram of bilateral earlobe pulse timing measurement system.

## Physical Design:

The system consists of a central wearable hub and three peripheral sensor leads: two earlobe clips containing the SFH-7050A sensors and one 3-lead ECG cable for chest placement. The central hub measures approximately 60mm x 40mm x 15mm. Earlobe clips are spring-loaded to ensure consistent contact.

## Software Subsystem:

The software subsystem, hosted on the nRF52840, acts as the brain for the platform's data acquisition and wireless communication. Upon initialization, the firmware configures the MAX30003 and MAX86141 via the SPI bus, setting optimal sampling rates and gain stages while enabling hardware interrupts for data readiness. To meet the high-level requirement of sub-millisecond timing precision, the software utilizes the nRF52840's Programmable Peripheral Interconnect and hardware timers to capture timestamps immediately upon receiving trigger signals from the sensors' interrupt pins, effectively bypassing CPU interrupt latency. The embedded application manages synchronized ring buffers to align the ECG and bilateral PPG streams, calculates the R-peak to pulse arrival time using fixed arithmetic and encapsulates this data into custom Bluetooth Low Energy. This ensures that the mobile application receives a continuous, time-aligned stream of physiological data for visualization  on cardiovascular analysis.

## Power Subsystem:

The power subsystem provides regulated and low-noise supply voltages for both analog and digital circuitry. It converts input power from USB (5V) or battery source into stable 3.3V and 5V rails as required. Separate filtering and decoupling networks are implemented to isolate analog front-end circuits from digital switching noise. The power subsystem ensures that voltage ripple does not degrade ECG and PPG signal integrity.

| Requirements | Verifications |
|---|---|
| 1. Provide a regulated 1.8V ± 0.2V DC rail to all subsystems from a 3.7V LiPo battery. | 1. Measure the LDO output using a DMM under peak load. Verify voltage stays within 1.6V – 2V. |
| 2. Maintain voltage ripple below 10 mV on the MAX30003 AVDD pin to ensure high ECG signal-to-noise ratio. | 2. Use an oscilloscope to measure ripple at the decoupling capacitor closest to Pin 6. |
| 3. Limit total system current draw to < 50mA during active bilateral sensing to ensure >10 hours of operation on a 500mAh battery. | 3. Connect a DMM in series with the battery and measure the average current while the device is in Active Sensing Mode. |

## ECG Analog Front-End Subsystem:

The ECG subsystem acquires a low-amplitude biopotential signal (typically 0.5–3 mV) from chest electrodes. The subsystem consists of:

- Instrumentation amplifier (e.g., AD8232)
- High-pass filter (~0.5 Hz cutoff)
- Low-pass filter (~40 Hz cutoff)
- Driven right-leg (DRL) circuit for common-mode rejection

The amplified and filtered ECG signal is fed into the ADC of the microcontroller. This channel provides the R-peak reference required for pulse transit time computation.

| Requirements | Verifications |
|---|---|
| 1. Maintain patient safety by limiting leakage current to < 10 µA via series resistance on electrode leads. | 1. Measure resistance with a DMM between the electrode connector and Pin 4/Pin 5 to verify the presence of 47k Ohm resistors. |
| 2. Successfully trigger a hardware interrupt on the nRF52840 within 5 ms of an anatomical R-peak occurrence. | 2. Probe the raw ECG signal (Ch1) and the INT2B pin (Ch2) on an oscilloscope. Measure the time delta between the peak and the logic low trigger. This requirement is also met if good ECG data is read |
| 3. Distinguish R-peaks from T-waves and baseline noise. | 3. Record 10 seconds of data. R peaks are clearly higher than T waves which are clearly higher than baseline noise. |

## Dual PPG Subsystem and Requirements

This subsystem contains two identical optical sensing channels placed on the left and right earlobes. Each channel includes:

- PPG sensor (MAX86141 and SFH-7050A)
- LED driver control
- Photodiode
- Anti-aliasing low-pass filter (maybe)

Both PPG channels are sampled simultaneously to ensure accurate bilateral timing comparison. Optical shielding is implemented to reduce ambient light interference.

| Requirements | Verifications |
|---|---|
| 1. Capture bilateral PPG waveforms simultaneously at a sample rate of >100Hz. | 1. Use a logic analyzer on the SPI bus to verify that the MAX86141 is being polled for dual-channel data at intervals. |
| 2. Limit LED drive current to 50% of max to prevent thermal discomfort on the earlobe during long-term wear. | 2. Read/set the registers from the MAX86141 over SPI to confirm the programmed drive current settings. |
| 3. Proper filtering and noise reduction techniques to ensure PPG heart rate peaks are visible. | 3. View the raw data on the mobile app. Ensure the heart-rate is visible above the noise. |

## Data Acquisition and Control Subsystem:

This subsystem coordinates sampling, synchronization, and data handling. It includes:

- Microcontroller (STM32 or equivalent)
- 12–16 bit ADC
- Shared low-drift crystal oscillator (<20 ppm)
- Hardware timer for timestamping
- USB or BLE communication interface

All three channels share a common sampling clock to minimize inter-channel jitter. Bluetooth is used only for data transmission and not for synchronization.

| Requirements | Verifications |
|---|---|
| 1. Maintain inter-channel timing jitter between ECG and PPG data packets of < 1 ms. | 1. Inject a synchronized 1Hz pulse from a function generator into both the ECG and PPG inputs. Verify the timestamp delta in the BLE packets is <1 ms. |
| 2. Sustain a stable Bluetooth Low Energy connection at a distance of 3 meters with zero packet loss. | 2. Move the receiver 3m away. Run the program and ensure that waveform data is still being communicated and plotted. |
| 3. Send timestamped data using external crystal oscillators. | 3. Review the firmware code to confirm that timestamps are being attached and sent with data. |

## Tolerance Analysis:

**Inter-Channel Timing Accuracy**

The primary technical risk of this design is achieving sub-millisecond synchronization between the ECG and bilateral PPG channels. Since pulse arrival time differences are the key measurement outcome, timing uncertainty must remain below 1 ms.

**Sampling Resolution**

The system may sample all channels at:

$$f_s = 1000\,\mathrm{Hz}$$

Thus,

$$T_s = 1\,\mathrm{ms}$$

The maximum timing quantization uncertainty is:

$$\Delta t_{quant} = \pm\frac{T_s}{2} = \pm 0.5\,\mathrm{ms}$$

**Oscillator Drift**

The crystal oscillator stability is ±20 ppm.
Over a 10-second recording:

$$\Delta t_{drift} = 10\,\mathrm{s} \times 20 \times 10^{-6}$$

$$\Delta t_{drift} = 0.2\,\mathrm{ms}$$

Because all channels share the same clock, drift mainly affects absolute time but is included for conservative estimation.

**Inter-Channel Skew**

ADC channel switching delay is approximately:

$$\Delta t_{skew} \approx 10\,\mu\mathrm{s} = 0.01\,\mathrm{ms}$$

This contribution is negligible.

**Total Timing Uncertainty**

$$\Delta t_{total} = 0.5\,\mathrm{ms} + 0.2\,\mathrm{ms} + 0.01\,\mathrm{ms} \approx 0.71\,\mathrm{ms}$$

# Cost and Schedule:

## Cost Analysis

For the project if we take the standard rate for an ECE graduate student of $40 an hour. We work for roughly 2.5 hours a day for the duration of this course which is 60 days and we have $6000 per teammate therefore total labor costs are $18000. Now to account for the parts for the board.

| Description | Manufacturer | Quantity | Cost | Link |
|---|---|---|---|---|
| BIOFY Optical Sensor (SFH 7050A) | ams-OSRAM | 2 | $4.42 | Link |
| Biometric AFE-PPG (MAX86140) | Analog Devices | 2 | $18.48 | Link |
| Biopotential AFE-ECG (MAX30003CTI+) | Analog Devices | 1 | $14.80 | Link |
| Bluetooth 5.0 MCU (nRF52840-QFAA) | Nordic Semiconductor ASA | 3 | $5.27 | Link |
| DC to DC converter (NTHD3100CT1G) | Onsemi | 3 | $1.56 | Link |
| Linear Voltage Regulator (TLV73318PDBVT) | Texas Instruments | 3 | $0.83 | Link |
| Power management (NPM1100-QDAA-R7) | Nordic Semiconductor ASA | 3 | $1.05 | Link |
| Linear Voltage Regulator (TLV76033DBZR) | Texas Instruments | 3 | $0.44 | Link |
| Type c connector (USB4125-GF-A) | GCT | 3 | $0.59 | Link |
| P-Channel MOSFET (SI2301CDS-T1-GE3) | Vishay Siliconix | 3 | $0.69 | Link |
| Crystal 1 for nRF (ECS-320-10-37B2-CKY-TR) | ECS Inc. | 3 | $0.35 | Link |
| Oscillator for MAX30003 (ASAKMPD1-32.768KHZ-T3) | Abracon LLC | 1 | $3.09 | Link |
| Crystal 2 for nRF (CM9V-T1A-32.768KHZ-9PF-20PPM-TA-QC) | Micro Crystal AG | 3 | $0.52 | Link |
| RF Antenna (AMCA72-2R470G-S1F-T4) | Abracon LLC | 3 | $0.54 | Link |

| | | | | |
|---|---|---|---|---|
| Other parts: (capacitors, resistors, inductors…) | | | neglect | |
| Earlobe Clips/Leads | 3D Printed | 4 | $16.00 | Link |
| Total Cost: | | | $18115.21 | |

## Schedule

| Week | Task | People |
|---|---|---|
| 3/2 | PCB Design: Complete schematic and route 4-layer PCB. Perform DRC and order the first batch. | Mark, Zhikuan |
| | Firmware Prep: Configure nRF52840 SDK and implement SPI Master drivers for sensor communication. | Joshua |
| 3/9 | Subsystem Testing: Receive PCB. Solder power regulator and verify 3.3V rail stability. | Zhikuan |
| | Prepare for breadboard demo and finalize third pcb | All |
| | Teamwork evaluation forms | |
| 3/23 | PPG Integration: Solder MAX86141 and SFH 7050A. Verify bilateral signal acquisition. | All |
| | ECG Integration: Solder MAX30003 and verify R-peak detection interrupts on nRF52840. | |
| | 3rd round of PCB way | |
| 3/30 | Software Timing: Implement 16MHz timer for sub-millisecond packet timestamping. | All |
| | Individual reports | Individual |
| 4/6 | System Integration: Integrate all sensors and test BLE transmission to the mobile app. | Mark, Zhikuan |
| | Prepare for progress demo | All |
| | Team contract assessment | Joshua |
| 4/13 | Verification: Conduct "Head-Tilt" test sessions to verify bilateral PAT variance detection.<br>Prepare for the final demo and fix any possible issues with PCB | All |

| Week | Task | People |
|---|---|---|
| | and finish the video assignment. | |
| 4/27 | Final Demo: Prepare technical presentation and final report documentation. | All |
| 5/4 | Finish final report | All |

# Engineering Ethics and Safety:

## Ethics

In developing the dual-earlobe PPG system, we will follow the IEEE Code of Ethics by ensuring honesty and realism in reporting performance and limitations. Since the device is intended for research use, we must accurately present measurement accuracy, synchronization error, and noise limitations without exaggeration. We will clearly state that the system is a research prototype and not a medical diagnostic device to prevent misuse.

Because the system collects physiological data, privacy protection is also an ethical responsibility. We will anonymize collected data, limit storage access, and use secure Bluetooth transmission to reduce the risk of data breaches.

## Safety and Regulatory Considerations

The device is worn on the earlobes and may be used for long periods, including overnight sleeping research, so electrical and thermal safety are critical. The system will be battery-powered at low voltage, include current-limiting protection, and follow safe PCB design practices to reduce electrical risk. LED drive currents will remain within manufacturer specifications to prevent excessive heating.

If human testing is conducted, we will follow campus policy and seek IRB approval if required. Although the device is not a certified medical product, relevant principles from medical electrical safety standards such as IEC 60601 will be considered during design.

## Societal Impact

This project may support research on whether bilateral pulse timing differences correlate with vascular or neurological conditions, such as stroke risk. While the system does not provide medical diagnosis, it could contribute to future non-invasive monitoring technologies.

However, misuse or over-interpretation of results is a potential concern. To mitigate this, we will clearly communicate the experimental nature of the device. Overall, the project promotes accessible physiological monitoring while maintaining responsible engineering practices.

# References:


ACM. “ACM Code of Ethics and Professional Conduct.” *Association for Computing Machinery*, 22 June 2018, www.acm.org/code-of-ethics.

ams-OSRAM. *BIOFY® Sensor - SFH 7050A: Integrated Optical Sensor for Pulse Oximetry & Heart Rate Monitoring*. Datasheet, 2023, .

Analog Devices. *MAX30003: Ultra-Low Power, Single-Channel Integrated Biopotential AFE*. Rev. 2, 2024, .

Analog Devices. *MAX86140/MAX86141: Best-in-Class Optical Data Acquisition System*. Rev. 5, 2023, .

IEEE. “IEEE Code of Ethics.” *IEEE*, June 2020, www.ieee.org/about/corporate/governance/p7-8.html.

International Electrotechnical Commission. *IEC 60601-1:2005+AMD1:2012 CSV: Medical Electrical Equipment - Part 1: General Requirements for Basic Safety and Essential Performance*. IEC, 2012.

Nordic Semiconductor. *nRF52840 Product Specification*. Version 1.11, Oct. 2024, .

SnapEDA. “MAX30003CTI+ Footprint, Symbol & 3D Model.” *SnapEDA*, 2024, .

Ultra Librarian. “nRF52840-QFAA-R7 Footprint and Schematic Symbol.” *Ultra Librarian*, 2024, .